BOSSONG

HYBRID

TECHNICAL DATA SHEET



UPDATE

09-2026

HYBRID

HYBRID RESIN
STYRENE FREE



BCR 400 HYBRID

cod. 747980 | 400 ml

Coaxial cartridge



BCR 300 HYBRID

cod. 747960 | 300 ml

Foil cartridge



⚠ BCR 165 HYBRID

cod. 747920 | 165 ml

Foil cartridge



⚠ **ON DEMAND PRODUCT, scheduled orders linked to MINIMUM quantities**

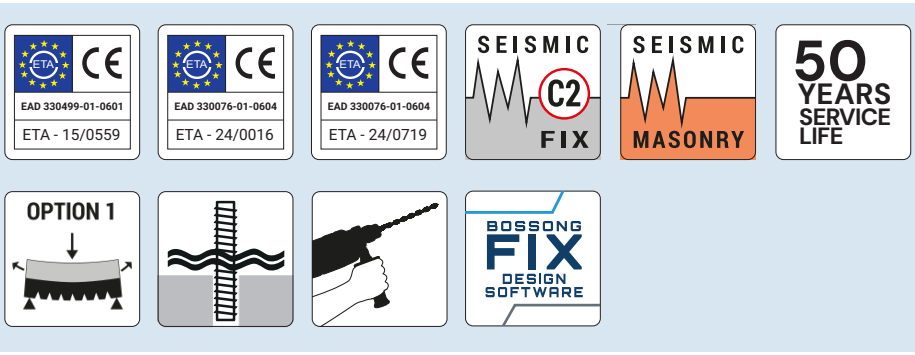

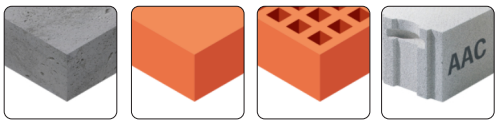

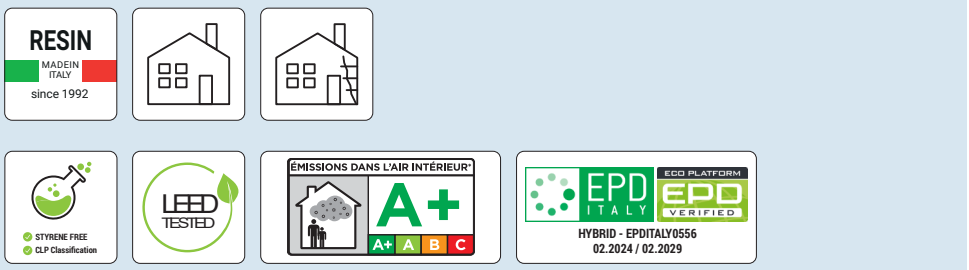



	20°C
OPEN TIME	6 min
CURING TIME	45 min

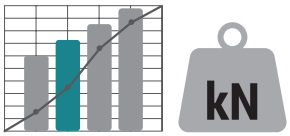

STORAGE AND CONSERVATION



CARTRIDGE



SETTING TIMES

Cartridge application temperature **+5°C / +30°C**

For winter applications, a cartridge temperature of **≥ 15°C** is recommended

HYBRID

BASE MATERIAL TEMPERATURE	OPEN TIME	CURING TIME
40°C	1 min	20 min
35°C	2 min	20 min
30°C	3 min	20 min
25°C	4 min	30 min
20°C	6 min	45 min
15°C	8 min	60 min
10°C	12 min	90 min
5°C	15 min	120 min
0°C	25 min	180 min
-5°C	30 min	360 min

INSTALLATION DATA

d	[mm]	BAR DIAMETER
d_0	[mm]	HOLE DIAMETER
h	[mm]	SUPPORT THICKNESS
h_{min}	[mm]	MINIMUM SUBSTRATE THICKNESS
s_{min}	[mm]	MINIMUM SPACING
c_{min}	[mm]	MINIMUM EDGE DISTANCE
h_{ef}	[mm]	EFFECTIVE ANCHORAGE DEPTH
d_f	[mm]	PLATE HOLE DIAMETER
s_w	[mm]	KEY
T_{inst}	[Nm]	TIGHTENING TORQUE

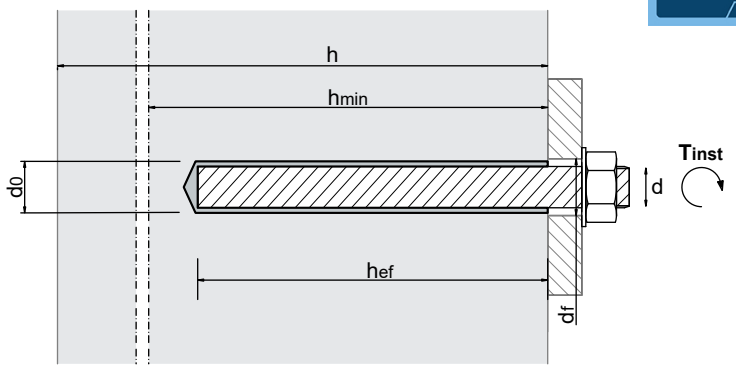

CONCRETE

d [mm]	d_0 [mm]	h_{min} [mm]	S_{min} [mm]	C_{min} [mm]	d_f [mm]	S_w [mm]	T_{inst} [Nm]
M8	10	h_{ef} + 30 mm	40	40	9	13	10
M10	12	h_{ef} + 30 mm	50	40	12	17	20
M12	14	h_{ef} + 30 mm	60	45	14	19	40
M14	16	h_{ef} + 2 d_0	75	50	16	22	40
M16	18	h_{ef} + 2 d_0	75	50	18	24	80
M20	22-24	h_{ef} + 2 d_0	90	55	22	30	130
M24	28	h_{ef} + 2 d_0	115	60	26	36	200

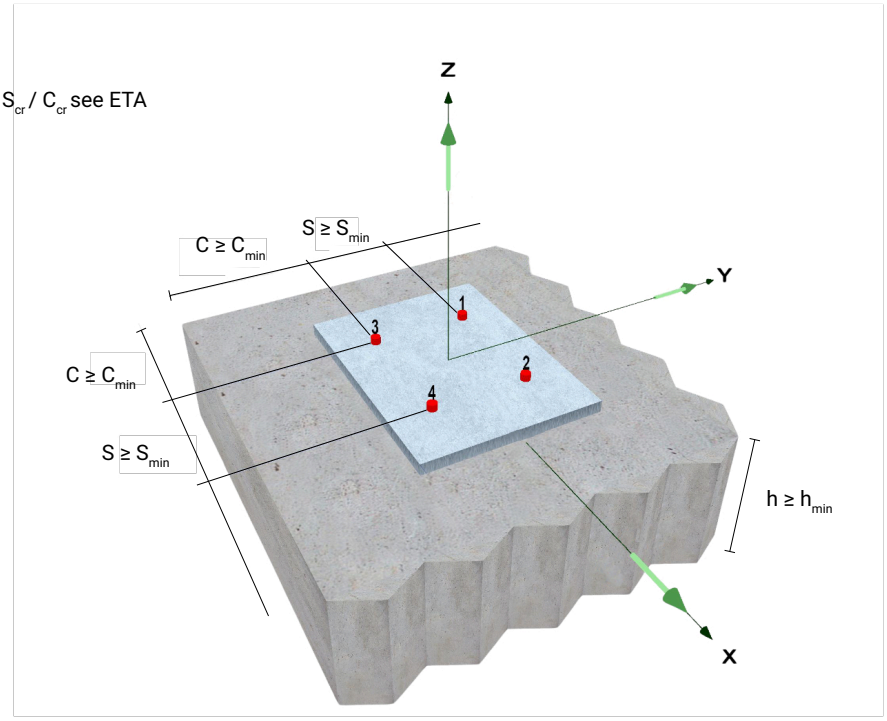

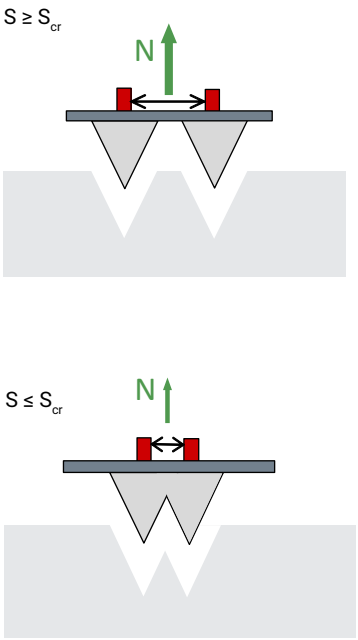

INSTALLATION DATA

d	[mm]	BAR DIAMETER
d_0	[mm]	HOLE DIAMETER
h	[mm]	SUPPORT THICKNESS
h_{min}	[mm]	MINIMUM SUBSTRATE THICKNESS
s_{min}	[mm]	MINIMUM SPACING
c_{min}	[mm]	MINIMUM EDGE DISTANCE
h_{ef}	[mm]	EFFECTIVE ANCHORAGE DEPTH

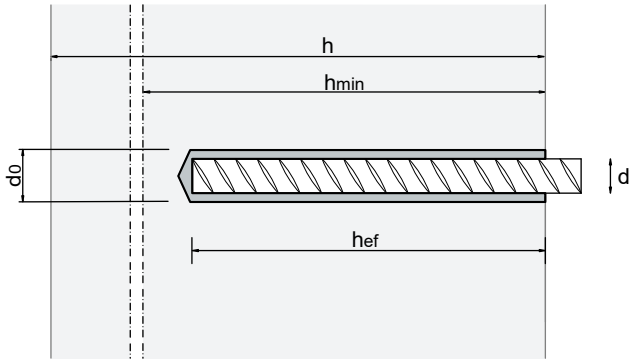

CONCRETE

d [mm]	d_0 [mm]	h_{min} [mm]	S_{min} [mm]	C_{min} [mm]
Ø 8	12	h_{ef} + 30 mm	50	40
Ø 10	14	h_{ef} + 30 mm	60	40
Ø 12	16	h_{ef} + 2 d_0	65	40
Ø 14	18	h_{ef} + 2 d_0	75	40
Ø 16	20	h_{ef} + 2 d_0	80	50

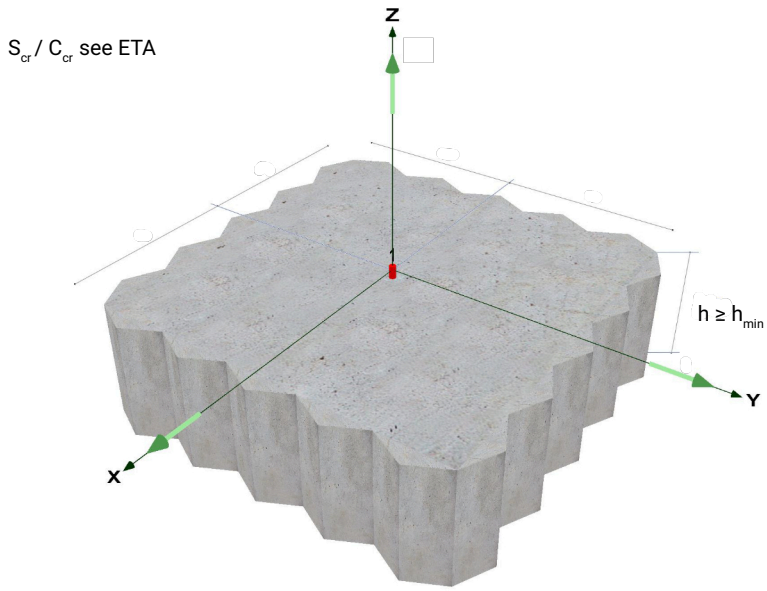

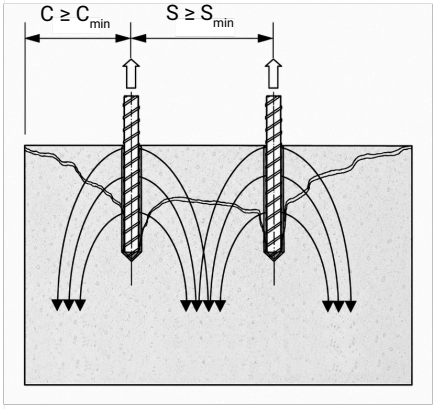

The tensile strength of the concrete is taken into account in the load transfer mechanism.

INSTALLATION DATA

d	[mm]	BAR DIAMETER
d_0	[mm]	HOLE DIAMETER
h	[mm]	SUPPORT THICKNESS
h_{min}	[mm]	MINIMUM SUBSTRATE THICKNESS
s_{min}	[mm]	MINIMUM SPACING
c_{min}	[mm]	MINIMUM EDGE DISTANCE
h_{ef}	[mm]	EFFECTIVE ANCHORAGE DEPTH
d_f	[mm]	PLATE HOLE DIAMETER
s_w	[mm]	KEY
T_{inst}	[Nm]	TIGHTENING TORQUE

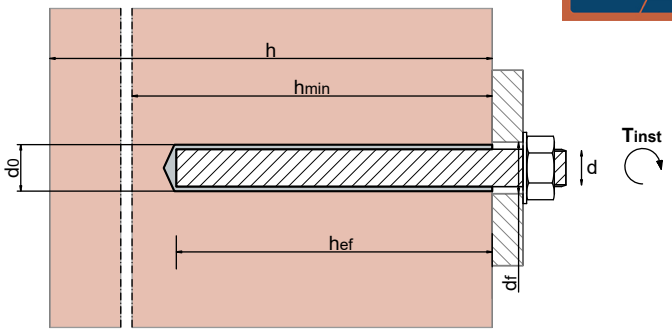

SOLID BRICK

d [mm]		d_0 [mm]	h_{min} [mm]	h_{ef} [mm]	S_{min} [mm]	C_{min} [mm]	d_f [mm]	S_w [mm]	T_{inst} [Nm]
M8	Ø 8	10	h_{ef} + 30 mm	80	50	50	9	13	5
M10	Ø 10	12	h_{ef} + 30 mm	85	50	50	12	17	8
M12	Ø 12	14	h_{ef} + 30 mm	95/160	50/55	50/55	14	19	10
M16		18	h_{ef} + 30 mm	105/200	60/55	60/55	18	24	10



SOLID BRICK (b) EN 771-1 ROSSO CLASSICO ρ=1560 Kg/m³
120 x 250 x 55 mm

AAC

d [mm]	d_0 [mm]	h_{min} [mm]	h_{ef} [mm]	S_{min} [mm]	C_{min} [mm]	d_f [mm]	S_w [mm]	T_{inst} [Nm]
M8	10	h_{ef} + 30 mm	80	50	50	9	13	2
M10	12	h_{ef} + 30 mm	85	50	50	12	17	2
M12	14	h_{ef} + 30 mm	95	50	50	14	19	2
M16	18	h_{ef} + 30 mm	105	60	60	18	24	2



AAC2 (d) EN 771-4 CLIMAGOLD ρ=300 Kg/m³
625 x 200 x 360 mm



AAC5 (d) EN 771-4 BLOCCO SISMICO ρ=575 Kg/m³
625 x 200 x 300 mm

S_{cr} / C_{cr} see ETA

INSTALLATION DATA

d	[mm]	BAR DIAMETER
d_0	[mm]	HOLE DIAMETER
h_{min}	[mm]	MINIMUM SUBSTRATE THICKNESS
s_{min}	[mm]	MINIMUM SPACING
c_{min}	[mm]	MINIMUM EDGE DISTANCE
d_f	[mm]	PLATE HOLE DIAMETER
s_w	[mm]	KEY
T_{inst}	[Nm]	TIGHTENING TORQUE
h_{ef}	[mm]	EFFECTIVE ANCHORAGE DEPTH

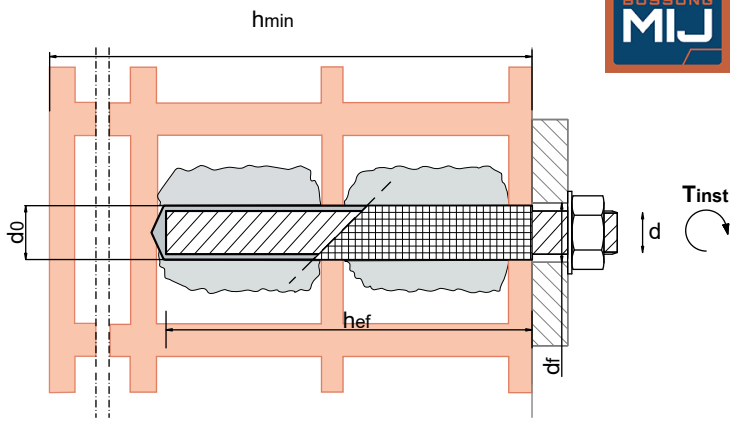

HOLLOW BRICK

d [mm]		d_0 [mm]	h_{min} [mm]	h_{ef} [mm]	S_{min} [mm]	C_{min} [mm]	d_f [mm]	S_w [mm]	T_{inst} [Nm]
M8	GC 12x80	12	h_{ef} + 30 mm	80	$l_{unit,max}$	100	9	13	4
M10	GC 15x85	16	h_{ef} + 30 mm	85	$l_{unit,max}$	100	12	17	4
M10	GC 15x135	16	h_{ef} + 30 mm	135	$l_{unit,max}$	100	12	17	4
M12	GC 20x85	20-22	h_{ef} + 30 mm	85	$l_{unit,max}$	100	14	19	4

$l_{unit,max}$ = Maximum masonry block size

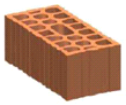

Hollow brick (c) EN 771-1 MATTONE DOPPIO UNI ρ=810 Kg/m³
190 x 250 x 120 mm



Hollow brick (c) EN 771-1 POROTON P800 ρ=900 Kg/m³
300 x 245 x 230 mm



Hollow brick (c) EN 771-1 Hlz B ρ=900 Kg/m³
115 x 240 x 71 mm

S_{cr} / C_{cr} see ETA

LOAD DATA

- EN1992-4
- Loads valid for a single anchor, without the influence of spacing or edge distance; h ≥ 2hef
- Shear action not directed towards the edge
- Overall safety factor included
- ψsus = 1,0
- Range T°C = -40°C / +24°C/ +40°C
- For the calculation of the recommended load: $N_{rec} = \frac{N_{rd}}{\gamma_{rec}}$; $V_{rec} = \frac{V_{rd}}{\gamma_{rec}}$
- γ_{rec} = 1,4

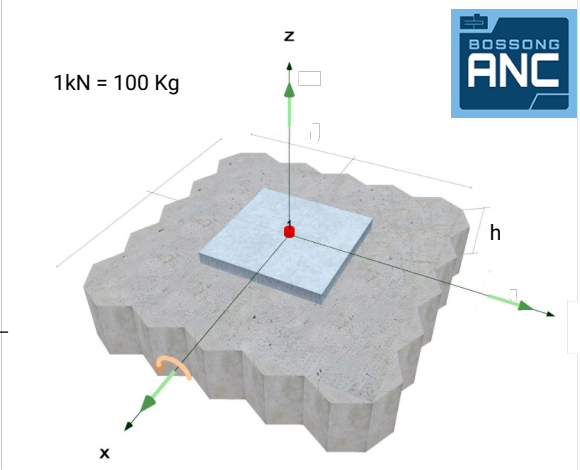

DESIGN LOAD – STEEL FAILURE

THREADED RODS

Nrd,s [kN]							
STEEL CLASS	M8	M10	M12	M14	M16	M20	M24
4.8	10,0	15,3	22,7	30,7	42,0	65,3	94,0
5.8	12,0	19,3	28,0	38,7	52,0	81,3	117,3
8.8	19,3	30,7	44,7	61,3	84,0	130,7	188,0
A2-A4/70	13,9	21,9	31,6	43,3	58,8	91,4	132,1

Vrd,s [kN]							
STEEL CLASS	M8	M10	M12	M14	M16	M20	M24
4.8	6,0	9,2	13,6	18,4	25,2	39,2	56,4
5.8	7,2	11,6	16,8	23,2	31,2	48,8	70,4
8.8	12,0	18,4	27,2	36,8	50,4	78,4	112,8
A2-A4/70	8,3	13,1	18,9	26,0	35,3	54,8	79,2

REBAR

Nrd,s [kN]					
STEEL CLASS	Ø 8	Ø 10	Ø 12	Ø 14	Ø 16
B450C	19,3	30,5	43,6	59,4	77,5
500B	20,7	32,7	46,8	63,8	83,3
500C	19,6	31,0	44,4	60,5	79,0

Vrd,s [kN]					
STEEL CLASS	Ø 8	Ø 10	Ø 12	Ø 14	Ø 16
B450C	9,0	14,2	20,3	27,7	36,2
500B	9,7	15,3	21,8	29,8	38,9
500C	9,2	14,5	20,7	28,2	36,9

LOAD DATA

NON-CRACKED CONCRETE C20/25





BAR DIAMETER	M8	M10	M12	M14	M16	M20	M24
d_0 [mm]	10	12	14	16	18	22-24	28
h_{ef} [mm]	DESIGN TENSILE LOAD N_{rd} [kN]						
60	10,9						
70	12,7	15,9					
80	14,5	18,2	19,6	19,6			
100	18,2	22,7	25,1	27,3	27,3		
120	19,3	27,2	30,2	35,2	33,5	35,9	
140		30,7	35,2	41,1	39,1	45,3	45,3
160			40,2	46,9	44,7	53,1	55,3
180			44,7	52,8	50,3	59,7	66,0
200				58,6	55,9	66,3	75,4
220				61,3	61,4	73,0	82,9
240					67,0	79,6	90,5
260					72,6	86,2	98,0
280					78,2	92,9	105,6
300					83,8	99,5	113,1
320					84,0	106,1	120,6
340						112,7	128,2
360						119,4	135,7
380						126,0	143,3
400						130,7	150,8
450							169,6
480							181,0

BAR DIAMETER	M8	M10	M12	M14	M16	M20	M24
d_0 [mm]	10	12	14	16	18	22-24	28
h_{ef} [mm]	DESIGN SHEAR LOAD V_{rd} [kN]						
60	12,0						
70	12,0	18,4					
80		18,4	27,2	36,8			
100			27,2	36,8	50,4		
120					50,4	71,9	
140						78,4	90,5
160							110,6
180							112,8

Steel-side failure Class 8.8

LOAD DATA

CRACKED CONCRETE C20/25



BAR DIAMETER	M10	M12	M14	M16
d_0 [mm]	12	14	16	18
h_{ef} [mm]	**DESING TENSILE LOAD N_{rd} [kN]**			
70	4,9			
80	5,6	8,4	9,8	
100	7,0	10,5	12,2	14,0
120	8,4	12,6	14,7	16,8
140	9,8	14,7	17,1	19,5
160	11,2	16,8	19,5	22,3
180	12,6	18,8	22,0	25,1
200	14,0	20,9	24,4	27,9
220		23,0	26,9	30,7
240		25,1	29,3	33,5
260			31,8	36,3
280			34,2	39,1
300				41,9
320				44,7

BAR DIAMETER	M10	M12	M14	M16
d_0 [mm]	12	14	16	18
h_{ef} [mm]	**DESIGN SHEAR LOAD V_{rd} [kN]**			
70	9,8			
80	11,2	16,8	19,5	
100	14,0	20,9	24,4	27,9
120	16,8	25,1	29,3	33,5
140	18,4	27,2	34,2	39,1
160			36,8	44,7
180				50,3
200				50,4

Steel-side failure Class 8.8

LOAD DATA

NON-CRACKED CONCRETE C20/25



BAR DIAMETER	Ø 8	Ø 10	Ø 12	Ø 14	Ø 16
d_0 [mm]	12	14	16	18	20
h_{ef} [mm]	DESIGN TENSILE LOAD N_{rd} [kN]				
60	12,1				
70	14,1	16,1	17,6	19,2	
80	16,1	18,4	20,1	23,5	23,5
90	18,1	20,7	22,6	26,4	27,1
100	19,3	23,0	25,1	29,3	30,2
120		27,6	30,2	35,2	36,2
130		29,9	32,7	38,1	39,2
140		30,5	35,2	41,1	42,2
150			37,7	44,0	45,2
160			40,2	46,9	48,3
170			42,7	49,8	51,3
180			43,6	52,8	54,3
190				55,7	57,3
200				58,6	60,3
210				59,4	63,3
250					75,4
280					77,5

BAR DIAMETER	Ø 8	Ø 10	Ø 12	Ø 14	Ø 16
d_0 [mm]	12	14	16	18	20
h_{ef} [mm]	DESIGN SHEAR LOAD V_{rd} [kN]				
60	9,0	14,2			
70	9,0	14,2	20,3	27,7	
80		14,2	20,3	27,7	36,2
90					36,2

Steel-side failure B450C

LOAD DATA

- TR054
- Loads valid for a single anchor, without the influence of spacing or edge distance
- Shear action not directed towards the edge
- Overall safety factor included
- Range T°C = -40°C / +40°C/ +50°C
- For masonry elements not covered by the ETA, the resistances can be evaluated by in situ tests according to the EOTA TR053

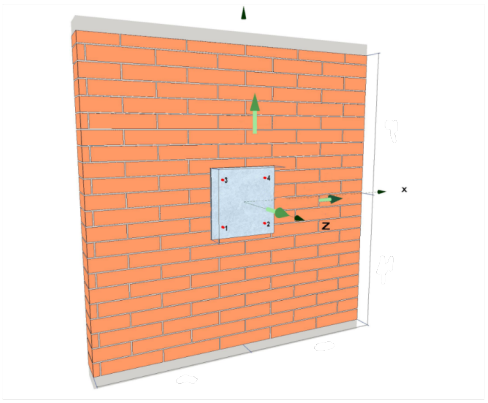

SOLID BRICK

d [mm]	h_{ef} [mm]	N_{rd} [kN]	V_{rd} [kN]	N_{rec} [kN]	V_{rec} [kN]
M8	80	0,8	2,2	0,6	1,6
Ø8	80	0,8	2,2	0,6	1,6
M10	85	1,0	3,4	0,7	2,4
Ø10	85	1,2	3,2	0,9	2,3
M12	95/160	1,4/1,6	4,6/5,6	1,0/1,1	3,3/4,0
Ø12	95/160	1,4/1,6	4,6/6,8	1,0/1,1	3,3/4,8
M16	105/200	1,6/2,0	5,4/10,4	1,1/1,4	3,9/7,4



DOPPIO UNI

d [mm]		N_{rd} [kN]	V_{rd} [kN]	N_{rec} [kN]	V_{rec} [kN]
M8	GC 12 x 80	1,6	2,4	1,1	1,7
M10	GC 15 x 85	2,0	2,6	1,4	1,9
M12	GC 20 x 85	2,2	3,6	1,6	2,6

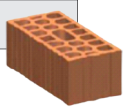

HLZ

d [mm]		N_{rd} [kN]	V_{rd} [kN]	N_{rec} [kN]	V_{rec} [kN]
M8	GC 12 x 80	1,6	2,4	1,1	1,7
M10	GC 15 x 85	2,0	2,6	1,4	1,9
M12	GC 20 x 85	2,2	3,6	1,6	2,6



LOAD DATA

POROTON

d [mm]		N_{rd} [kN]	V_{rd} [kN]	N_{rec} [kN]	V_{rec} [kN]
M10	GC 15 x 135	1,4	2,4	1,0	1,6

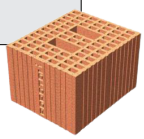

AAC2

d [mm]	h_{ef} [mm]	N_{rd} [kN]	V_{rd} [kN]	N_{rec} [kN]	V_{rec} [kN]
M8	80	0,75	0,75	0,5	0,5
M10	85	1,0	0,75	0,7	0,5
M12	95	1,25	1,25	0,9	0,9
M16	105	1,25	1,25	0,9	0,9



AAC5

d [mm]	h_{ef} [mm]	N_{rd} [kN]	V_{rd} [kN]	N_{rec} [kN]	V_{rec} [kN]
M8	80	1,25	1,75	0,9	1,3
M10	85	1,5	2,0	1,1	1,4
M12	95	1,75	2,0	1,3	1,4
M16	105	2,0	2,0	1,4	1,4

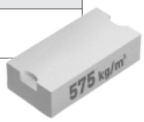

INSTALLATION PROCEDURE

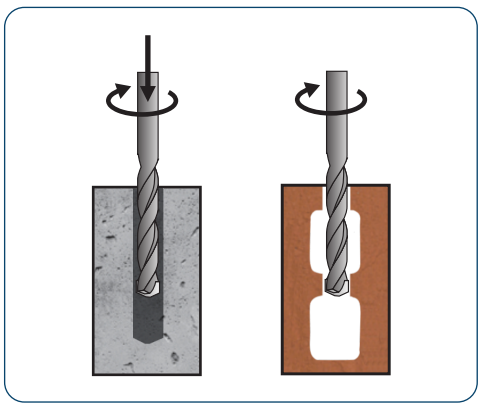

DRILL THE HOLE

Use a rotary hammer drill for solid materials, but use only the rotary setting for hollow materials to avoid damaging the base material. Always ensure the hole is drilled perpendicular to the surface.

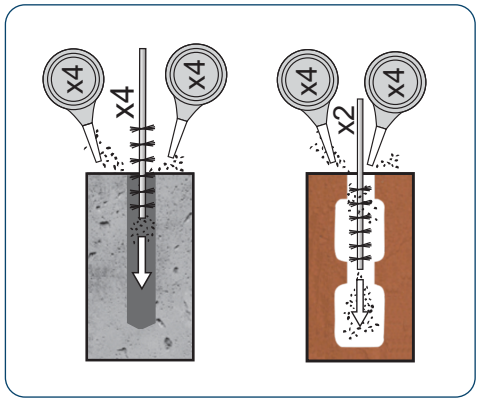

CLEAN THE HOLE

Blow out the hole using a blow-out pump or air compressor to completely remove dust and debris, then clean the walls with a brush and blow it out again until the hole is completely clean.

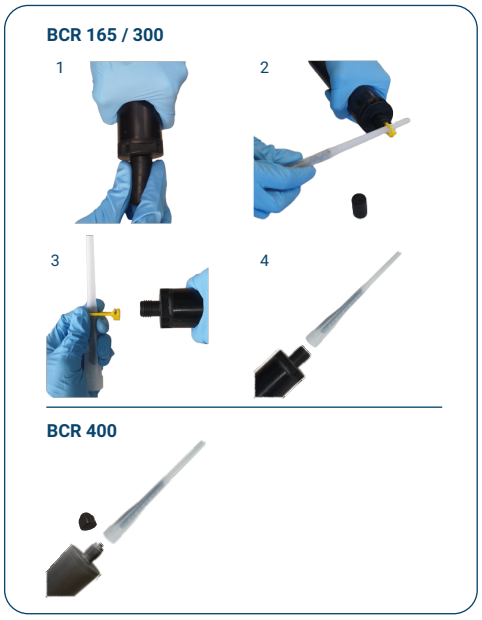

PREPARE THE CARTRIDGE

For the 300 ml and 165 ml sizes, unscrew the cap, insert the mixer into the plastic extractor, and pull to remove the bag's metal clip. Screw on the mixer and insert the cartridge into the dispenser, using hand and face protection.

For the 400 ml size, unscrew the cap. Screw on the mixer and insert the cartridge into the dispenser, using hand and face protection.

INSTALLATION PROCEDURE

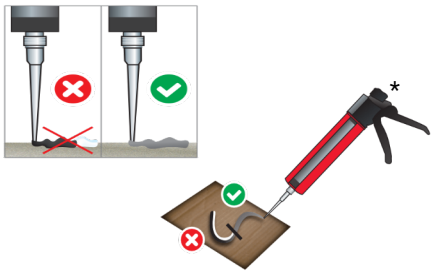

* Use an appropriate dispenser

CHECK FOR PROPER MIXING

Extrude an initial portion of the product until the two components are completely mixed; only then is the product ready for use.

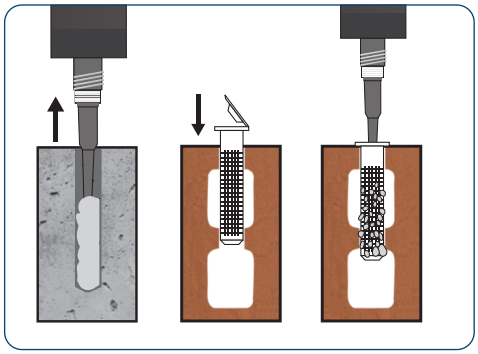

EXTRUDE THE RESIN

Fill the hole starting from the bottom up to approximately two-thirds of its volume. For hollow materials, insert the plastic or metal sleeve into the brick and extrude the resin until the hole is completely filled. For deep holes, use extension tubes to ensure proper filling from the bottom outwards, avoiding air pockets or unfilled areas. The chemical anchor is thixotropic and suitable for overhead applications. Using an extension tube with an injection plug allows for precise control of the resin flow, ensuring the hole is correctly filled from the bottom to the opening.

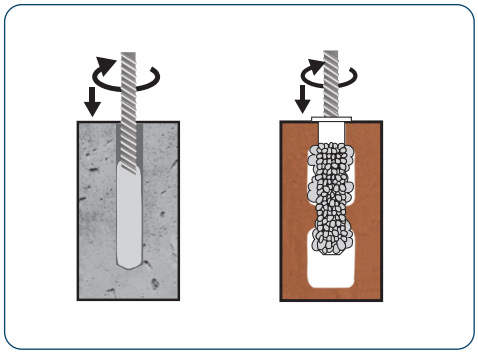

INSERT THE METAL BAR

The metal element must be clean and dry and should be inserted with a rotating motion to allow air bubbles to escape.

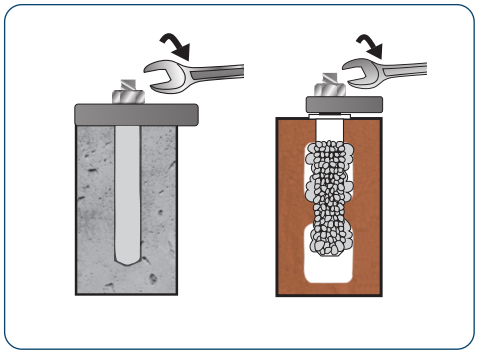

OBSERVE THE RECOMMENDED PROCESSING TIMES

Once the allotted time has elapsed, tightening and loading can be carried out.

NOTE: The technical, installation, and load data provided in this document are subject to revision and updates. This version supersedes and replaces all previous versions. It is the customer's responsibility to verify the suitability of Bossong products for the intended application and to ensure that job site conditions, as well as usage and disposal procedures, comply with applicable regulations. For specific applications and designs, the use of BOSSONG FIX software for anchor sizing and verification is recommended; this is available in the technical section of the Bossong website. To access the most up-to-date version of the technical documentation, please visit www.bossong.com or contact our Technical Department.